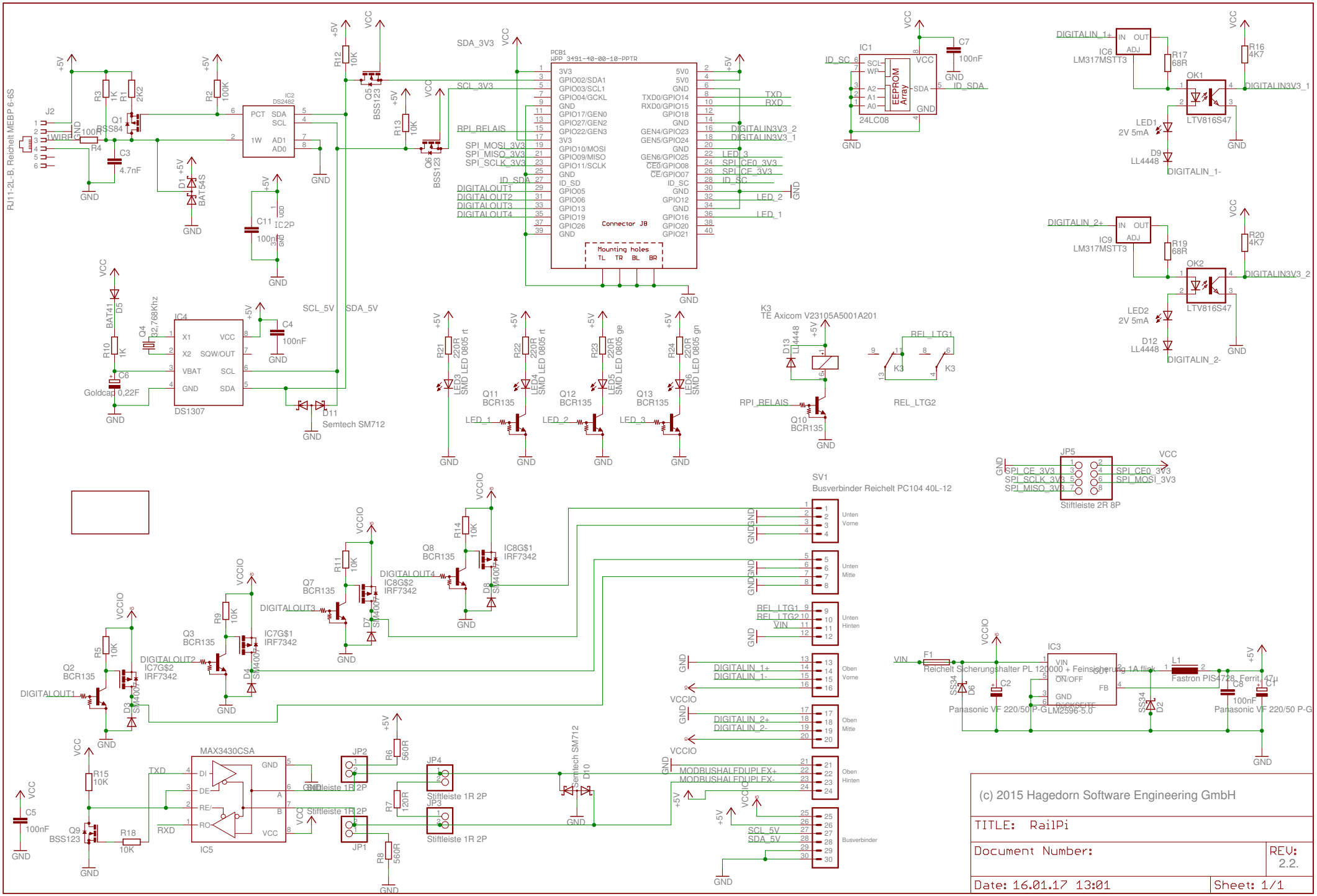
RJ11-2L-B, Reichelt MEBP 6-6S
J2
1WIRE
GND
R4 100R
C3 4.7nF
R3 1K
R1 2K2
Q1 BSS84
R2 100K
IC2 DS2482
PCT SDA SCL 1W AD1 AD0
D1 BAT54S
C11 100nF
IC2P
R12 10K
Q5 BSS123
R13 10K
Q6 BSS123
SDA_3V3
SCL_3V3
RPI_RELAIS
SPI_MOSI_3V3
SPI_MISO_3V3
SPI_SCLK_3V3
ID_SDA
DIGITALOUT1
DIGITALOUT2
DIGITALOUT3
DIGITALOUT4
PCB1
WPP 3491-40-00-10-PPTR
Connector J8
Mounting holes
TL TR BL BR
TXD
RXD
DIGITALIN3V3_2
DIGITALIN3V3_1
LED_3
SPI_CE0_3V3
SPI_CE_3V3
ID_SC
LED_2
LED_1
IC1
EEPROM Array
24LC08
C7 100nF
ID_SC
ID_SDA
DIGITALIN_1+
DIGITALIN_1-
IC6 LM317MSTT3
R17 68R
R16 4K7
OK1 LTV816S47
DIGITALIN3V3_1
LED1 2V 5mA
D9 LL4448
DIGITALIN_2+
DIGITALIN_2-
IC9 LM317MSTT3
R19 68R
R20 4K7
OK2 LTV816S47
DIGITALIN3V3_2
LED2 2V 5mA
D12 LL4448
BAT41 D5
R10 1K
Q4 32.768Khz
C6 Goldcap 0,22F
IC4 DS1307
X1 X2 VBAT GND VCC SQW/OUT SCL SDA
C4 100nF
SCL_5V
SDA_5V
D11 Semtech SM712
R21 220R
R22 220R
R23 220R
R24 220R
LED3 SMD LED 0805 rt
LED4 SMD LED 0805 rt
LED5 SMD LED 0805 ge
LED6 SMD LED 0805 gn
Q11 BCR135
Q12 BCR135
Q13 BCR135
K3 TE Axicom V23105A5001A201
D13 LL4448
REL_LTG1
REL_LTG2
Q10 BCR135
JP5
SPI_CE_3V3
SPI_SCLK_3V3
SPI_MISO_3V3
SPI_CE0_3V3
SPI_MOSI_3V3
Stiftleiste 2R 8P
SV1
Busverbinder Reichelt PC104 40L-12
Unten Vorne
Unten Mitte
Unten Hinten
Oben Vorne
Oben Mitte
Oben Hinten
Busverbinder
MODBUSHALFDUPLEX+
MODBUSHALFDUPLEX-
VIN
F1 Reichelt Sicherungshalter PL 120000 + Feinsicherung 1A flink
SS34 D6
C2 Panasonic VF 220/50 P-G
IC3 LM2596-5.0
VIN ON/OFF GND FB
RÜCKSEITE
SS34 D2
L1 Fastron PIS4728, Ferrit, 47µ
C8 100nF
C1 Panasonic VF 220/50 P-G
R14 10K
IC8G$1 IRF7342
Q8 BCR135
IC8G$2 IRF7342
D8 SM4007
R11 10K
Q7 BCR135
IC7G$2 IRF7342
D7 SM4007
R9 10K
Q3 BCR135
IC7G$1 IRF7342
D4 SM4007
R5 10K
Q2 BCR135
D3 SM4007
VCCIO
R15 10K
C5 100nF
Q9 BSS123
R18 10K
MAX3430CSA
IC5
DI DE RE/ RO GND A B VCC
TXD
RXD
JP2
JP1
JP4
JP3
Stiftleiste 1R 2P
R6 560R
R7 120R
R8 560R
Semtech SM712
D10
(c) 2015 Hagedorn Software Engineering GmbH
TITLE: RailPi
Document Number:
REV: 2.2.
Date: 16.01.17 13:01
Sheet: 1/1